Appendix H

Monitoring Plans

Draft Residuals Monitoring Plan

Sediment Remediation and Habitat Restoration
Buffalo River Area of Concern

Buffalo, New York

WA No. 146-RDRD-1524/Contract No. EP-S5-06-01

Prepared for

December 2012

CH2MHILL®

Contents

Table

Figure

Acronyms and Abbreviations

AOC	area of concern
BUI	beneficial use impairment
COC	chemical of concern
DMU	dredge management unit
ECL	Environmental Conservation Law
EC	Environmental Control
FS	feasibility study
GLLA	Great Lakes Legacy Act
IC	Institutional control
NYCRR	New York Codes, Rules, and Regulations
NYSDEC	New York State Department of Environmental Conservation
PAH	polycyclic aromatic hydrocarbon
PCB	polychlorinated biphenyl
RMP	residuals monitoring plan
SWAC	surface weighted average concentration
USEPA	United States Environmental Protection Agency

SECTION 1

Introduction

This Residual Monitoring Plan (RMP) presents the engineering and institutional controls for the capped areas and the monitoring activities that will be implemented to evaluate the effectiveness of the overall remedy. The residual monitoring will evaluate the river conditions two and five years after the completion of the sediment remediation and habitat restoration activities.

This plan consists of the following sections:

1. Introduction
2. Engineering and Institutional Controls Plan
3. Cap Monitoring and Maintenance
4. Two-Year Monitoring
5. Five-Year Monitoring

The monitoring activities during the dredging operations are described in separate monitoring plans.

SECTION 2

Engineering and Institutional Control Plan

Since impacted sediment will remain within the cap areas, engineering controls (EC) and institutional controls (ICs) are required to protect human health and the environment. This engineering and institutional control plan describes the procedures for the implementation and management of the EC/ICs at the cap areas.

2.1 Engineering Controls

Exposure to contamination in sediment within the Buffalo River Area of Concern (AOC) will be limited by construction of caps in the City Ship Canal and near some critical structures. Planned cap construction details are shown in the final design. The integrity of installed caps will be inspected at defined, regular intervals. Procedures for the inspection and maintenance of caps are provided in Section 3 of this RMP.

2.2 Institutional Controls

A series of ICs will be applied to control, maintain, and monitor cap areas and critical structures with none or partial dredging areas as described below. Adherence to these ICs within the capped areas will be required by the environmental easements that will be implemented under this RMP. The identified ICs may not be discontinued without an amendment to or extinguishment of the environmental easements.

The controls and requirements listed in this RMP including New York State Department of Environmental Conservation (NYSDEC) approved amendments to the RMP will be incorporated into and made part of all environmental easements. Environmental easements will be consistent with the NYSDEC environmental easement template and notification requirements. Individual ICs will be developed for each cap area and critical structure with none or partial dredging. IC plans will be developed in accordance with but separate from this plan. ICs plans will identify specific monitoring requirements for that site to be implemented by the owner or Grantor separate from the monitoring requirements outlined in this plan. The controls and requirements, listed below, apply to the use of the Controlled Property, run with the land, are binding on the Grantor and the Grantor's successors and assigns, and are enforceable in law or equity against the owner of the Controlled Property, any lessees, and any person using the Controlled Property. The Grantor for each capping or critical structure without limited dredging will be identified in the individual IC plan for that site. The following are the controls and requirements:

- Compliance with the environmental easements and the RMP by the Grantor and the Grantor’s successors and assigns
- Monitoring and maintenance of capped areas as specified in the RMP
- Performance of 2-year and 5-year sediment monitoring as described in the RMP
- Reporting data and information obtained during monitoring events within the capped areas at the frequency and in a manner defined in the RMP
- The Controlled Property may only be used for purposes that do not include penetration or other disturbance of the cap:
  - Engineering controls must be inspected and maintained as specified in the RMP.
  - Data and information pertinent to site management of the Controlled Property must be reported at the frequency and in a manner defined in the RMP.
  - Monitoring to assess the performance and effectiveness of the remedy must be performed as defined in the RMP.
  - Access to the Controlled Property must be provided to agents, employees, or other representatives of the state of New York with reasonable prior notice to the owner of the Controlled Property to evaluate compliance with the restrictions identified by the environmental easement.

- The Controlled Property may not be used for activities that will disturb sub-surface contaminated sediments, without additional, sampling and/or remediation and amendment of the environmental easement(s).
- The RMP describes obligations the Grantor assumes on behalf of Grantor, its successors and assigns. The Grantor's assumption of the obligations contained in the RMP may include sampling, monitoring, and/or cap maintenance activities, and providing certified reports to NYSDEC, is and remains a fundamental element of the Department's determination that the Controlled Property is safe for a specific use, but not all uses. The RMP may be modified in accordance with the Department's statutory and regulatory authority. The Grantor and all successors and assigns, assume the burden of complying with the RMP and obtaining an up-to-date version of the RMP from:

  Site Control Section
  Division of Environmental Remediation
  NYSDEC
  625 Broadway
  Albany, New York 12233
  Phone: (518) 402-9553

- Grantor must provide all persons who acquire any interest in the Controlled Property a true and complete copy of the RMP that the Department approves for the Controlled Property and all Department-approved amendments to that RMP.
- Grantor covenants and agrees that until such time as the environmental easement is extinguished in accordance with the requirements of Environmental Conservation Law (ECL) Article 71, Title 36 of the ECL, the property deed and all subsequent instruments of conveyance relating to the Controlled Property shall state in at least 15-point bold-faced type:

- This property is subject to an Environmental Easement held by the New York State Department of Environmental Conservation pursuant to Title 36 of Article 71 of the Environmental Conservation Law.
- Grantor covenants and agrees this environmental easement shall be incorporated in full or by reference in any leases, licenses, or other instruments granting a right to use the Controlled Property.
- Grantor covenants and agrees it shall, in conformity with the requirements of the RMP for the Buffalo River, submit a written statement to NYSDEC by an expert NYSDEC may find acceptable certifying under penalty of perjury, in such form and manner as the Department may require, that:

  1. The inspection of the site to confirm the effectiveness of the institutional and engineering controls required by the remedial program was performed under the direction of the individual set forth at 6 New York Codes, Rules, and Regulations (NYCRR) Part 375-1.8(h)(3);
  2. The ICs and/or ECs employed at such site:
     a. Are in-place, effective and performing as designed
     b. Are unchanged from the previous certification, or that any identified changes to the controls employed were approved by NYSDEC and all controls are in the Department-approved format
     c. Nothing has occurred that would impair the ability of such control to protect the public health and environment
  3. The owner of the Controlled Property will continue to allow access to such real property to evaluate the continued maintenance of such controls;
  4. Nothing has occurred that would constitute a violation or failure to comply with the RMP for such controls;
  5. The report and all attachments were prepared under the direction of, and reviewed by, the party making the certification;

6. To the best of his/her knowledge and belief, the work and conclusions described in the certification are in accordance with the requirements of the site remedial program, and generally accepted engineering practices; and
7. The information presented is accurate and complete.

2.3 Notifications

Notifications will be submitted by the owner of a Controlled Property to NYSDEC as needed for the following reasons:

- 60-day advance notice of any proposed changes in Site use that are required under the terms of 6 NYCRR Part 375 or ECL.
- Notice within 1week of any damage or defect to structures that reduces or has the potential to reduce the effectiveness of other ECs and likewise any action to be taken to mitigate the damage or defect.
- Follow-up status reports on actions taken to respond to any events requiring ongoing responsive action shall be submitted to NYSDEC within 45 days and shall describe and document actions taken to restore the effectiveness of the ECs.

Any change in the ownership of the Controlled Property or the responsibility for implementing this RMP will include the following notifications:

- At least 60 days prior to the change, NYSDEC will be notified in writing of the proposed change. This will include a certification that the prospective purchaser has been provided with a copy of all approved work plans and reports, including this RMP.
- Within 15 days after the transfer of all or part of the Controlled Property, the new owner’s name, contact representative, and contact information will be confirmed in writing.

SECTION 3

Cap Monitoring and Maintenance

Engineered caps are planned for areas located adjacent to critical structures where complete removal of material identified as exceeding remedial goals cannot be performed and the current slopes support placement of a cap. Separately, a cap will be installed over the entire width of the south end of the City Ship Canal. Planned cap areas are shown on Figure 1. Cap monitoring will be performed on engineered caps to verify their integrity and protectiveness.

3.1 Cap Monitoring

Monitoring will occur during cap placement to verify cap thickness through hydrographic surveys. After completion of the cap construction, a bathymetric survey and drawings will be completed to document cap material elevations.

Cap monitoring and maintenance will be performed to confirm performance and integrity. Cap monitoring will include regularly scheduled monitoring of capped areas 2 and 5 years post-construction. Ongoing cap monitoring will continue to be evaluated in the future based on observations to that point and will be outside the scope of the Great Lakes Legacy Act (GLLA) project.

3.1.1 Scheduled Monitoring

Monitoring will be conducted to determine the physical integrity of cap layers. The monitoring program will include bathymetric surveys and visual inspections.

Cap monitoring bathymetric surveys will be performed using either single beam or multi-beam acoustical systems. The interpretation of changes in bathymetric surveys will consider the consolidation of soft sediments beneath the armored cap. The degree of consolidation depends on the thickness of cap placement, the elapsed time since placement, the thickness of soft sediment beneath the cap, initial conditions of the sediment, and consolidation properties of the sediment. Typically, most of the consolidation is expected to occur within the first year after placement.

Assuming the sediment removal is performed in 2013 and 2014, scheduled cap monitoring will be performed in 2016 (Year 2) and 2019 (Year 5). The cap monitoring results will be reported in a technical memorandum following each monitoring event.

3.1.2 Evaluation of Monitoring Activities

Erosion may have occurred if a significant differential exists in cap elevation between the previous bathymetric survey and the most recent bathymetric survey. Erosion is a significant decrease in the cap surface elevation over time that cannot be linked to cap consolidation.

3.1.2.1 Armored Caps

For armored capped areas near critical structures, if a bathymetric survey indicates a significant differential in cap elevation over a contiguous area larger than 2,000 square feet, the affected cap areas will be assessed by poling or will be visually inspected by a diver. A significant differential is considered to be an elevation change (lowering) of 12 inches or greater in order to trigger the poling or diving activity. The objective of the poling or diver inspection is to determine if the armor stone layer is intact. If physical poling and/or diver inspection confirms the armor stone remains intact, this will indicate the cap has settled rather than eroded.

Poling will be completed with a 0.75-inch diameter poling rod marked every 0.1 foot. Poling will be conducted over the entire affected cap area using 100-foot transects perpendicular to the shore and with locations along each the transect spaced at 20-foot intervals. It is intended that poling will be completed in suspect areas to determine if gravel/stone is still present based on pole refusal and measurements to the top of armor layer. If the sediment cannot be distinguished from gravel/stone by the feel of refusal, divers will be used to visually inspect the cap.

3.1.2.2 City Ship Canal Cap

For the City Ship Canal cap, if a bathymetric survey indicates a significant differential in cap elevation over a contiguous area larger than 5,000 square feet, cap maintenance activities will be considered. For the City Ship Canal cap, a significant differential is considered to be an elevation change (lowering) of 12 inches or greater.

3.1.2.3 Cap Maintenance

Cap maintenance activities will be performed if monitoring indicates a significant loss of cap material.

If cap maintenance is necessary, possible response actions include the following:

- Repair of the identified area (placement of additional backfill or armor material).
- Enactment of additional institutional or other controls to help limit further cap erosion.
- Increase the frequency of cap monitoring in the eroded area.

Additional supplemental evaluations may be performed to identify which additional response activities may be appropriate for consideration. If monitoring or other information shows a pattern of cap degradation in multiple areas, then additional response activities may be considered, including cap enhancement (for example, application of a thicker armor stone layer or use of larger armor stone).

SECTION 4

Two-Year Monitoring

The purpose of the 2-year monitoring is threefold:

1. Determine whether the remediation and subsequent natural recovery have achieved the project remedial goals.
2. In locations where remedial goals have not been met, estimate whether the remediation is expected to meet the remedial goals by Year 5.
3. In locations where natural recovery is not expected to achieve the remedial goals by Year 5, identify target locations where enhanced natural recovery (that is, placement of a suitable substrate to accelerate surface sediment concentration reductions)[1] may be necessary.

4.1 Site Description

For the purposes of the 2-year and 5-year monitoring, the monitored portion runs from the upstream-most portion of the remedy area to the mouth of the river, and includes the City Ship Canal. Decision areas will be used to monitor performance in the Buffalo River and City Ship Canal. The decision areas are based on 1/3-mile segments of the river (bank to bank), and target the areas that correspond to the GLLA remedy (see Figure 1). The decision areas are denoted with a black outline on Figure 1. The decision areas are grouped into three monitoring areas.

4.2 Sediment Chemistry and Physical Characterization

Remedy performance will be measured by compositing samples over the decision areas and analyzing for chemicals of concern (COCs) to determine the surface weighted average concentration (SWAC) of each decision area. The COCs are polychlorinated biphenyls (PCBs), polycyclic aromatic hydrocarbons (PAHs), lead, and mercury. The following composite sampling plan is based on the U.S. Environmental Protection Agency's (USEPA's) 2010 guidance document. The USEPA's composite sampling approach is designed to provide lower variability and higher reproducibility in heterogeneous media and establishes a representative estimation of mean contaminant levels in the environment. This increased reliability increases confidence in decision-making for ecologically affected media.

4.2.1 Composite Sampling for PCBs, Lead, and Mercury

Composite samples will be used to characterize each decision area. Samples to be composited will be taken from a uniform grid in each decision area as follows:

- Eight transects will be placed across the river at about 200-foot intervals.
- Five sample locations will be spaced evenly across each transect, beginning and ending about 10 feet (or as practical) from each bank. No samples will be taken through an area that has been capped.
- At each sample location a 1-foot core will be collected, homogenized, and split into replicate portions. One portion (defined as the "Composite Portion") will be used for the composite sample, and the second portion will be archived (defined as the "Archived Portion") for future analysis, if necessary. If insufficient volume is obtained from the single core, a second core will be collected and homogenized with the first core.

[1] The alternatives array does not consider additional redredging as a viable long-term maintenance option for dredged areas. The design calls for dredging to till in all areas, except for those associated with critical structures, which will be capped if possible. (This is a significant change from the FS, which advocated dredging to a depth-of-contamination elevation.) Redredging if necessary to achieve design elevations will be done during operations based on bathymetric surveys. Once an area is dredged to till, additional dredging becomes an inefficient method to achieve target remedial goals (contaminated sediments have been removed). Thus, failure to achieve the feasibility study remedial goals would be attributed to insufficient deposition of clean sediment. Furthermore, redredging at the 2- or 5-year intervals will disrupt any recovery that has occurred. Additional dredging will only be considered where new inventory is discovered during the 2-year monitoring event.

- An equal volume from each composite portion will be homogenized and combined into a single composite sample representing the respective decision area. Thus, each decision area composite will be comprised of approximately 40 evenly-spaced samples collected over a 1/3-mile segment of the river or the City Ship Canal.
- The archived portions of the samples will be processed and stored in appropriate containers and at proper temperatures for future analysis, if needed. The individual samples designated for archiving will be stored until analyses and interpretations are complete, to allow reanalysis or analysis of incremental transect composites, if needed.
- The decision area composite samples will be analyzed for total PCBs as Aroclors, lead and mercury.

4.2.2 Discrete Sampling for PAHs

Samples will be collected from each dredge management unit (DMU) that has been dredged to determine if the remedial goals for PAHs are met. Discrete samples will be collected as follows:

- Each DMU area will be gridded and sampling points will be determined after completion of the final remedial action. Sampling density will be one sample per 6,000 square feet. If the actual dredge area of the DMU is less than 6,000 square feet, then a single sample will be collected.
- The discrete PAH sample will be collected from a second core at one of the composite sample locations. One sample location will be selected per transect intersecting the DMU.
- At each sample location a 1-foot core will be collected and homogenized.
- All discrete samples will be analyzed for total PAHs.
- The results of the total PAH analyses will be subject to the same decision criteria for the SWAC analyses using the target of 16 parts per million.

4.2.3 Sedimentation Assessment and Physical Sediment Characterization

Sediment coring will use clear core liners to allow for visual observation and measurement of sediment thickness. The depth of soft sediment above the till will be measured and recorded at each Year 2 core location to determine the thickness of “new” sediment. A geologist will identify the till layer and other layering features and will visually characterize the sediment deposits since dredging to till was completed. The measured sediment will be evaluated along with the bathymetric data to estimate sedimentation rates. In areas with low-sedimentation rates, the thickness of the soft sediment above the till layer may be less than 1 foot till or clay material will be added to the composite.

4.3 Decision Area Performance Evaluation

4.3.1 PCB, Lead, and Mercury Data Evaluation

Each decision area composite will be analyzed for total PCBs, lead, and mercury. The results will represent the SWAC of these contaminants for each decision area. Decision alternatives were established in the feasibility study (FS) to provide guidance in response to results obtained from Year 2 surface sediment sampling and analytical results (ENVIRON et al. 2010). The following decision alternatives will be considered based upon the Year 2 sample results:

- Case 1: The SWAC remedial goals for lead, mercury, and total PCBs, have been achieved at the 2-year monitoring period—No further action is required.
- Case 2: The SWAC remedial goals for lead, mercury, and total PCBs, are not achieved at the 2-year monitoring period, but calculated Year 5 concentrations (using a recovery model such as the model described below) indicates SWAC remedial goals will be met at Year 5—Monitoring may be continued in Year 5 in areas where the calculated Year 5 concentration indicates SWAC remedial goals will be met at Year 5.
- Case 3: The SWAC remedial goals for lead, mercury, and total PCBs, are not achieved at the 2-year monitoring period, and monitoring and modeling indicate that the remedial goals will not be met by Year 5—The placement of a suitable material (for example, clean soil, sand, or beneficially reused sediment) will be employed to achieve

compliance with the remedial goals in areas that do not demonstrate an acceptable decrease in surface sediment concentration as compared to pre-remedial concentrations. In areas where the remedial goals are not achieved by Year 2 and enhanced natural recovery measures are implemented, sampling may be completed after enhanced natural recovery implementation, or at Year 5, to confirm remedial goals have been met. If sampling completed after enhanced natural recovery implementation confirms remedial goals have been met, no additional monitoring will be required.

4.3.2 Evaluation of PAH Results

Discrete samples from each DMU in which dredging was conducted will be analyzed for total PAHs. The results will represent the estimated surface concentration for the DMU. Decision alternatives were established in the FS to provide guidance in response to results obtained from Year 2 surface sediment sampling and analytical results. The following decision alternatives will be considered based upon the Year 2 sample results:

- Case 1: The total PAH remedial goal has been achieved at the 2-year monitoring period—No further action is required.
- Case 2: The total PAH remedial goal is not achieved at the two-year monitoring period, but calculated Year 5 concentrations (using a recovery model, such as the model included below) indicates the remedial goal will be met at Year 5—Monitoring may be continued in Year 5 in areas where the calculated Year 5 concentration indicates the remedial goal will be met at Year 5.
- Case 3: The total PAH remedial goal is not achieved at the two-year monitoring period, and monitoring and modeling indicate that the remedial goals will not be met by Year 5—The placement of a suitable material (for example, clean soil, sand, or beneficially-reused sediment) will be employed to achieve compliance with the remedial goals in areas that do not demonstrate an acceptable decrease in surface sediment concentration as compared to pre-remedial concentrations. In areas where the remedial goals are not achieved by Year 2 and enhanced natural recovery measures are implemented, sampling may be completed after enhanced natural recovery implementation, or at Year 5, to confirm remedial goals have been met. If sampling completed after enhanced natural recovery implementation confirms remedial goals have been met, no additional monitoring will be required.

4.3.3 Identifying Areas that Do Not Demonstrate an Acceptable Decrease in Surface Sediment Concentration

For areas that have not yet achieved the remedial goals, it is necessary to determine whether monitoring results demonstrate acceptable progress toward those goals. Estimated deposition rates and Year 2 chemical concentrations will be incorporated into a recovery model. The model will be used to predict whether insufficient sedimentation is controlling the natural recovery of the Decision Area, and whether the remedial goals are likely to be met by Year 5. The USEPA's recovery model (Equation 1), is one such method of determining the effects of sedimentation and mixing over time, and may be selected to determine expected surficial concentrations at Year 5.

$$C_t = C_b\left(\frac{D_s}{D_m}\right) + C_{t-1}\left(1 - \frac{D_s}{D_m}\right) \qquad \text{(Eq 1)}$$

where

C_t = Surficial concentration at year t
C_{t-1} = Surficial concentration at year t-1
C_b = Contaminant concentration in incoming sediments
D_s = Depth of annual sedimentation
D_m = Depth of mixing

[The recovery model must be used in a manner that estimates an average concentration over the top 1-foot of material expected to be in place at Year 5. For example, depending on estimated mixing depth and depth of annual sedimentation, the above model may only calculate estimated concentrations in the upper portion of the top 1-foot of material at Year 5. Estimates of concentrations in layers of material throughout the top 1-foot must be used to obtain the average concentration in the top 1-foot at Year 5.]

Should the recovery model results indicate a decision area is unable to achieve the remedial goals at Year 5, additional sediment analyses may be performed to target enhanced natural recovery efforts to accelerate surface sediment concentration reductions within the affected decision area or DMU. Sedimentation rates used in the model should be consistent with sedimentation recorded within each respective DMU.

4.4 Additional Sediment Analyses

Additional sediment analysis may be necessary for some or all of the 40 archived samples representing a decision area composite should natural recovery fail to achieve the SWAC-based remedial goals. The additional analyses will target those parameters that do not meet the remedial goals to identify the location(s) that caused the elevated SWAC or SWACs for each respective compound. This location, or multiple locations, may then be resampled for further characterization using a “step-out” sampling approach to delineate the area that caused the elevated SWAC or SWACs. Previous data used to support the FS and remedial design will be reviewed to target areas most likely to contain the highest residual concentrations, so samples may be analyzed from those areas first.

Additional sediment sampling also may be conducted for discrete samples for total PAH analysis to better define areas where remedial goals were not met in Year 2.

Upon determining the location of the elevated concentrations, the step-out sampling will be performed at each location to determine if there is a contaminated area associated with an elevated sample location. Step-out sampling will consist of four samples (N, E, S, W); each 50 feet from the original location. This will define a 0.25-acre resample zone. These samples will be tested for the failing parameter(s).

The results of the additional analyses will be evaluated to determine whether additional enhanced natural recovery is necessary to address areas that contribute to remedial goal exceedances, and where it can be established that accelerating surface sediment concentration reductions above and beyond natural recovery could be implemented to achieve the remedial goals by Year 5. If significantly varying sedimentation depths are identified within a given decision area or DMU for the left bank, center channel or right bank, then it may be prudent to calculate multiple sedimentation depths within a given decision area or DMU for purposes of placing additional materials.

4.5 Biological Monitoring

Biological monitoring will be performed after completion of all habitat restoration work as summarized on Table 1. Monitoring for Year 2 will address the following remedial action objectives:

1. Reduce exposure of wildlife populations and the aquatic community to sediment COC concentrations above protective levels.
2. Implement a remedy compatible with the Buffalo River Remedial Advisory Committee's goal of protecting and restoring habitat and supporting wildlife.

4.5.1 Fish Community Surveys

Fish community assessment surveys will document fish species composition at selected sampling sites, as well as estimates of abundance, size distributions, and biomass by species. Fish surveys will determine post-remediation environmental conditions and evaluate progression of reduction in beneficial use impairments (BUIs) for fish community composition and abundance. Surveys will be completed at one upstream, one downstream and one City Ship Canal location. Two additional locations may be chosen based on the results at the first three locations. Sample locations will be chosen to be consistent with previous work and to document remedy effectiveness at sites proposed for restoration.

Data collected from these locations will ultimately be used to support quantitative calculations, such as the Quantitative Habitat Evaluation Indices (Rankin 1989) for the habitat assessment and the Index of Biotic Integrity (IBI) for the fish community assessment. External lesions, anomalies, and parasites will also be cataloged and recorded by the biologists for each fish. Metrics will include the following:

1. Total Taxa
2. Percent Centrarchids
3. Percent Catostomidae
4. Percent Cyprinidae
5. Percent Dominant Species
6. Similarity Index
7. Species Diversity
8. Percent Tolerant/Intolerant Species
9. Percent Omnivores
10. Percent Top Carnivores
11. Abundance
12. Condition Factor

Results will be compared to data from the previous investigations to assess post-remedial conditions relative to pre-remedial conditions. No actions are planned based on the Year 2 results.

4.5.2 Benthic Invertebrates

Benthic invertebrate community composition was documented in 2009 and summarized in the supplement remedial investigation report (ENVIRON et al. 2009). No new data were collected as part of the baseline remedial assessment study in 2011 as the quality and spatial distribution of the 2009 data were considered adequate to document baseline conditions. Eight locations were previously sampled and include five in areas that will be directly affected by the proposed remedy. Benthic invertebrate community composition and abundance community will be evaluated at five locations in Year 2 to determine post-remediation environmental conditions and check progress on progression of reduction in BUIs as summarized on Table 1. Sample locations will coincide with previous locations at river mile 0.3, 1, 2.1, 4.75, and 5.5. At each location 3 to 5 replicates will be collected using ponar grabs. A visual survey in Year 2 and limited taxonomy will be performed.

Data analysis will use standard metrics to quantitatively display the results, including the following: species richness; abundance; Ephemeroptera, Plecoptera, and Trichoptera richness; Hilsenhoff Biotic Index; percent model affinity; species diversity; dominance; Non-Chironomid/Oligochaete richness; and Chironomid mouthpart deformities. Results will be compared to those of the previous investigations to assess post-remedial conditions relative to pre-remedial conditions. No actions are planned based on the Year 2 results.

4.5.3 Habitat Restoration Areas

In addition to the biological monitoring, habitat restoration areas will be monitored following the completion of the 2-year monitoring period conducted by the habitat restoration contractor under warranty for the restoration work. As part of the verification of the warranty, an independent evaluation will be completed and if the final warranty evaluation should coincide with the dredging 2-year monitoring event the additional evaluation may not be required. The purpose of the monitoring is to determine post-remediation environmental conditions and check progress on reduction in BUIs for the Buffalo River at the restoration areas. Metrics for monitoring the effectiveness of the habitat restoration areas are summarized in Table 1. It is recommended that metrics are assessed annually up to the 5 year monitoring period. However, resources to complete monitoring in Years 3 and 4 are not part of the GLLA project and the partners will work together to identify those resources.

SECTION 5

Five-Year Monitoring

The purpose of the 5-year monitoring is threefold:

1. Determine whether the GLLA remediation and subsequent natural recovery have achieved the project remedial goals.
2. In areas that have not met remedial goals, identify additional action(s) to achieve goals.
3. Publish a post-dredge biological condition report that documents measured biological conditions in the river.

5.1 Sediment Chemistry and Physical Characterization

The exact scope of the monitoring will be based on the results of the Year 2 monitoring event and subsequent remedial work. As part of Year 2 monitoring, the river was divided into 1/3-mile-long decision areas to determine SWACs for PCBs, mercury, and lead (see Figure 1). For PAHs, individual DMUs were tested in Year 2 using discrete samples.

1. If a decision area (lead, mercury, PCBs) or DMU (PAHs) met the remedial goals in Year 2, then no testing would be needed in Year 5.
2. If a decision area or DMU was on target to meet its remedial goals in Year 5, sediment sampling and characterization would be performed in these areas as described for the Year 2 sampling (see Section 4.2).
3. If a decision area or DMU required placement of additional suitable material to enhance the natural recovery at Year 2, and sampling occurred at that time to demonstrate compliance with remedial goal, no additional testing would be required at Year 5. Absent confirmation sampling at Year 2, sediment sampling and analyses will be performed as described for the Year 2 sampling (see Section 4.2).

If a decision area or DMU fails to achieve its respective target concentrations, the decision area or DMU will be subjected to the same analyses described for the Year 2 sampling to determine what portion or portions of the decision area or DMU contributed to elevated concentrations measured in Year 5.

Additional remedial actions will be identified and implemented to achieve remedial goals.

5.2 Biological Monitoring

Biological monitoring performed at Year 5 will address the following remedial action objectives:

1. Reduce human exposure for direct sediment contact and fish consumption from the Buffalo River by reducing the availability and/or concentrations of the COCs in sediment.
2. Reduce exposure of wildlife populations and the aquatic community to sediment COC concentrations above protective levels.
3. Implement a remedy compatible with the Buffalo River Remedial Advisory Committee' goal of protecting and restoring habitat and supporting wildlife.

Biological monitoring is summarized in Table 1.

5.2.1 Fish Community Surveys

Fish community assessment surveys within the AOC will be completed following the same approach as for the Year 2 monitoring. In addition, fish samples will be collected as part of the surveys for laboratory analysis to determine the concentration of PCBs in fish generally consumed by people. General fish health will also be evaluated.

5.2.2 Fish Bioaccumulation Sampling

PCB fish residue concentrations of four species will be determined by sampling fish at four zones. Three of the species will be chosen to be the size and type consumed by humans and can include largemouth bass, carp, brown

bullhead, or yellow perch. Samples will be analyzed as NYSDEC standard fillet. Bluntnose minnow (young of the year, fall) also will be collected and analyzed as whole fish.

PCB concentrations in whole-body composites will be determined by sampling fish at three locations. Three whole-body composites per location consisting of five fish per composite if small species will be collected. Target species include benthivore (for example, suckers/bullhead) and trophic Level 3 fish (for example, bluegill/perch). Sampling will be consistent with baseline sampling performed in 2011.

Fish will also be collected to detect the presence of liver lesions to check progress of reduction in BUIs. Representative samples will be selected from three locations within the AOC and fish will be greater than 25 centimeters. Samples will be sent to an off-site laboratory for liver tissue analysis.

5.2.3 Benthic Invertebrates

Benthic invertebrate community composition and abundance community will be evaluated the same as Year 2 monitoring except full taxonomy will be performed at an offsite laboratory (see Table 1)

5.2.4 Habitat Restoration Areas

In addition to the biological monitoring, habitat restoration areas will be monitored in Year 5 as outlined for the Year 2 monitoring.

SECTION 6

References

CH2M HILL and Ecology and Environment, Inc. 2011a. *Basis Of Design Report, Buffalo River Area Of Concern, Buffalo, New York, Intermediate Design for Sediment Remediation.* Prepared for EPA Region 5 Remedial Action Contract 2. December.

CH2M HILL and Ecology and Environment, Inc. 2011b. *Basis Of Design Report, Buffalo River Area Of Concern, Buffalo, New York, Intermediate Design for Habitat Restoration.* Prepared for USEPA Region 5 Remedial Action Contract 2. December.

CH2M HILL and Ecology and Environment, Inc. 2012. *Data Summary Report, Buffalo River Area Of Concern Baseline Remedial Assessment Study, Buffalo, New York.* Prepared for USEPA Region 10 Architect and Engineering Services Contract 10. March.

ENVIRON International Corporation, MACTEC Engineering & Consulting, Inc., and LimnoTech. 2010. *Draft Final Feasibility Study for the Buffalo River, New York*. *Includes Ecology Engineering Evaluation Report as Appendix F.* Prepared on behalf of Buffalo River Great Lakes Legacy Act Project Coordination Team. November.

ENVIRON International Corporation, MACTEC Engineering & Consulting, Inc., and LimnoTech. 2009. *Sediment Remedial Investigation Report for the Buffalo River, New York.* Prepared on behalf of Buffalo River Great Lakes Legacy Act Project Coordination Team. March.

Rankin, E. 1989. *The qualitative habitat evaluation index (QHEI): Rationale, methods and application.* Ohio Environmental Protection Agency, Division of Water Quality Planning and Assessment, Columbus, OH.

U.S Environmental Protection Agency. 2010. *User Guide—Quality Assurance Project Plan Template for Soils Reassessment of Dioxin Sites.*

Tables

TABLE 1

Buffalo River Proposed Habitat Construction Evaluation and Biological Sampling

Buffalo River AOC, Buffalo, New York

Remedial Action Objective	Purpose	Parameter	Metric	Method/Approach	Year Performed*	Trigger for Action Or Data Interpretation?	Comments
Reduce human exposure for direct sediment contact and fish consumption from the Buffalo River by reducing the availability and/or concentrations of the contaminants of concern in sediment	Determine the concentration of fish generally consumed by people (two species)	Fish Tissue Concentrations	PCB fish residue concentrations (NYSDEC Standard fillets)	Sample size: 10 fish from each of four species in each of four zones: carp (edible size) largemouth bass (edible size) brown bullhead, yellow perch or pumpkinseed, depending upon availability (edible size) bluntnose minnow (young of the year, fall)	2019	none for GLLA project.	No action on part of GLLA project. We are collecting the data to provide to NYSDEC and/or BNRK. We need to be certain that either NYSDEC or BNRK will use the data before we actually spend $$ on collecting it.
Reduce Exposure of wildlife populations and the aquatic community to sediment COC concentrations above protective levels.	• Determine post-remediation environmental conditions • Check progress on progression of reduction in BUI impairment	Fish Community Assessment	fish community composition and abundance	Community surveys at 3 to 5 locations within AOC. Assessed using Index of Biotic Integrity (IBI) for the fish community assessment.	2015 & 2019		• Need to identify method of sample collection • Increased sampling locations from 3 to 5 • Compare to historical data from within the AOC
	• Evaluate general fish health • Determine post-remediation environmental conditions • Check progress on progression of reduction in BUI impairment	Fish Bioaccumulation	whole body tissue samples	Sample 2 species of fish at 3 locations within the AOC (3 whole body composites per location consisting of 5 fish per composite if small species. Compositing might not be necessary if the individual is large). My notes say Jen will submit a list of species from the SRIR report.	2019		• Include species from different trophic levels • Sample locations at RMs 1-2, 2-4, 4-6
	Detect the presence of liver lesions to • Determine post-remediation environmental conditions • Check progress on progression of reduction in BUI impairment	Fish deformities	Fish Liver samples & DELTs	Sample in 3 zones within the AOC to collect fish >25 cm. Work will be consistent with previous work in 2009 for the FS.	2019		• May require twilight/night sampling • Request analysis be performed by Hinton and Law (did previous analyses)
	• Determine post-remediation environmental conditions • Check progress on progression of reduction in BUI impairment	Benthic Community	Benthic Community composition and abundance	Community surveys at 5 locations within the AOC (3-5 replicates per site collected using ponar grabs). May use ICI or NYSDEC ICI guidance, but we want to be consistent with the 2009 work. In Year 2 there will be limited taxonomic testing.	2015 & 2019		• Sample locations: RMs 0.3, 1, 2.1, 4.75, 5.5; • Compare to historical data from within the AOC • Could select sampling locations that allow for correlations with sediment toxicity data • where to sample - in dredged area, downstream of dredging, or in overall AOC? Depends on true purpose of sampling
Reduce or otherwise address legacy sediment COC concentrations to improve the likelihood that future dredged sediments will not require confined disposal	**Biological sampling not applicable for this RAO - will be addressed through sediment remediation operation and residual monitoring plans**						

TABLE 1

Buffalo River Proposed Habitat Construction Evaluation and Biological Sampling

Buffalo River AOC, Buffalo, New York

Remedial Action Objective	Purpose	Parameter	Metric	Method/Approach	Year Performed*	Trigger for Action Or Data Interpretation?	Comments
Implement a remedy compatible with the Buffalo River Remedial Advisory Committee's goal of protecting and restoring habitat and supporting wildlife.	• Determine post-remediation environmental conditions • Check progress on progression of reduction in impairment	Vegetation	Plant survival rate (SAV/EV)	1) Map existing and newly constructed SAV/EV beds. 2) Identify species in SAV/EV beds. 3) Measure percent cover and determine plant density for each bed.	2015 & 2019, annually if available outside project	Re-plant as funding allows	Following 2-yr. warranty period
			Specific Plants	Evaluate individual plant species survival rate during plant survival rate monitoring (discussed above)	2015 & 2019, annually if available outside project	Re-plant as funding allows	Following 2-yr. warranty period
		In-River Structures	Rock Vane	Visually monitor the location of stones used in the rock vane.	2015 & 2019, annually if available outside project	If any of the stones have moved, reset them to their original location	
			LUNKERS (excluding SAV beds)	Visually monitor the presence of the LUNKERS.	2015 & 2019, annually if available outside project	no action, just monitor status of physical structure	
			Rootwads/Anchored Woody Debris	Visually monitor the presence and location of the anchoring stones and duckbill anchors on the rootwads and woody debris.	2015 & 2019, annually if available outside project	If the anchoring stones/duckbill anchors are not functioning as expected, they should be adjusted or replaced.	
			Coir Logs	Visually monitor the presence and location of the anchoring stones and duckbill anchors on the coir logs.	2015 & 2019, annually if available outside project	If the anchoring stones/duckbill anchors have moved, reset them to their original location.	
			Habitat structures/mounds in City Ship Canal	Visually monitor for the presence of fish and percent cover of vegetation on the structures.	2015 & 2019, annually if available outside project	See Vegetation triggers above.	

* Based on 2013 dredging and capping completed and 2014 as the year the habitat construction is complete.

Figure

L:\Buffalo\Buffalo River\Remedial_design\maps\MXD\Monitoring areas\monitoring_areas.mxd December 10, 2012

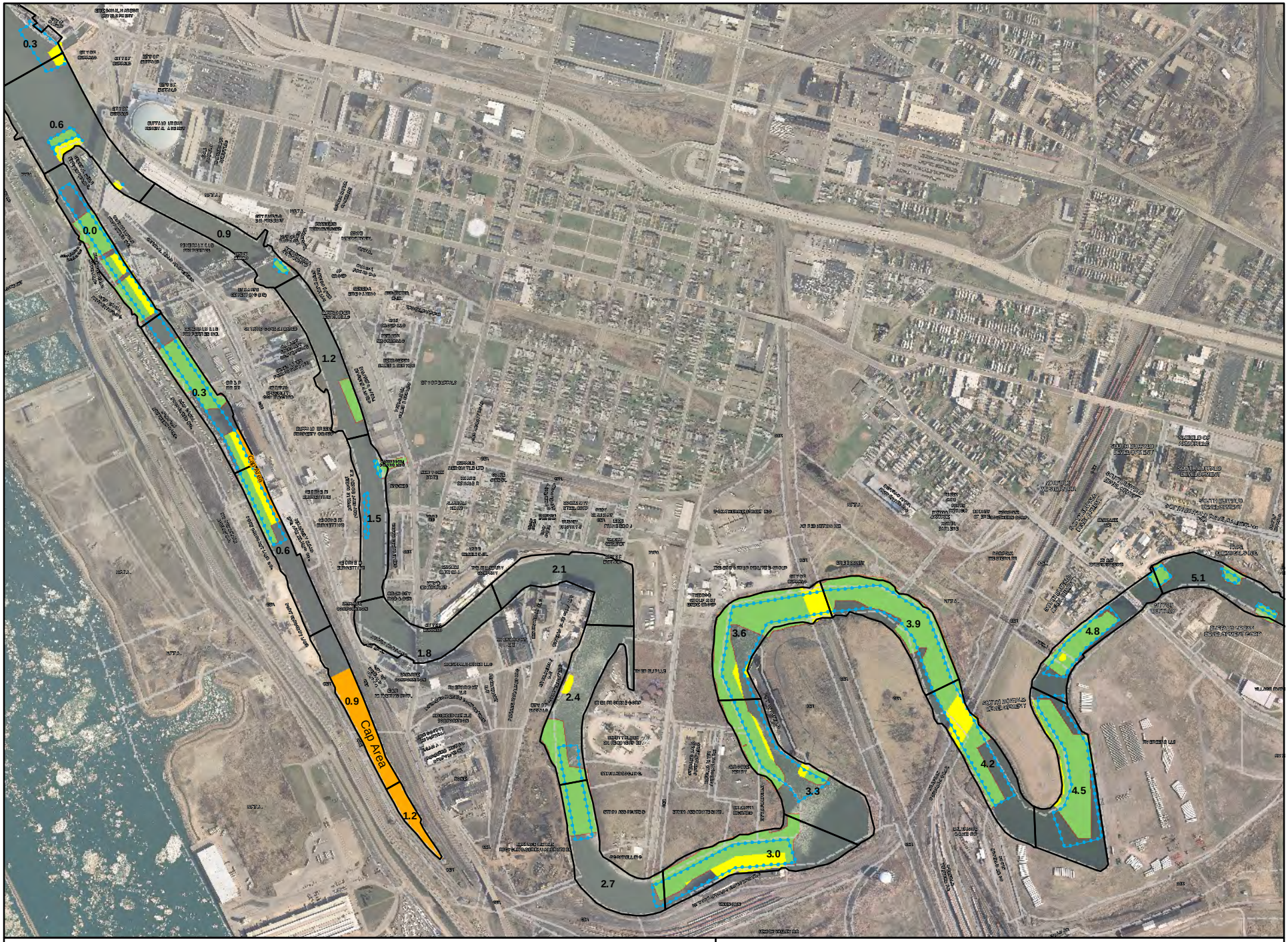

Cap Area
Dredge Area
No Dredge Area
Parcel
Monitoring Area (one third mile)
USACE GLRI 2011 Dredge Boundary

N
S
0 250 500 1,000 1,500 2,000 Feet

Figure 1 Cap Areas and Monitoring Areas Buffalo River AOC

TSCA Monitoring Plan

Buffalo River Area of Concern

Buffalo, New York

Prefinal Design for Great Lakes Legacy Act Sediment Remediation and Habitat Restoration

WA No. 146-RDRD-1524/Contract No. EP-S5-06-01

Prepared for

December 2012

CH2MHILL®

Contents

Tables

Acronyms and Abbreviations

AOC	Area of Concern
BMP	best management practice
CAMP	Community Air Monitoring Plan
CFR	*Code of Federal Regulations*
COC	contaminant of concern
DMU	dredge management unit
ELAP	Environmental Laboratory Accreditation Program
ft^2	square feet
GLLA	Great Lakes Legacy Act
GLNPO	Great Lakes National Program Office
GPS	Global Positioning System
µg/L	micrograms per liter
m/sec	meters per second
mg/kg	milligrams per kilogram
mg/L	milligram per liter
PAH	polycyclic aromatic hydrocarbon
PCB	polychlorinated biphenyl
PM_{10}	particulate matter finer than 10 micrometers in diameter and smaller
ppm	parts per million
RCRA	Resource Conservation and Recovery Act
TCLP	toxicity characteristic leaching procedure
TSCA	Toxic Substances Control Act
TSS	total suspended solids
TWTS	temporary water treatment system
USEPA	United States Environmental Protection Agency
VOC	volatile organic compound

SECTION 1

TSCA Dredging Operations

The sediment in one dredge management unit (DMU), designated as DMU-8b, contains total polychlorinated biphenyl (PCB) concentrations exceeding the Toxic Substances Control Act (TSCA) level of 50 parts per million which is also a Resource Conservation and Recovery Act (RCRA) listed hazardous waste (B007) in New York. In order to assess potential environmental impacts related to the dredging and management of the TSCA-level sediments, this TSCA Monitoring Plan will be implemented by the contractor. The dredging-related monitoring activities are described below. Air monitoring and temporary water treatment system monitoring requirements are presented in Sections 2 and 3, respectively. The sampling described below is summarized in Table 1 and the analytical methods are summarized in Table 2.

1.1 Water Quality Monitoring During Dredging

In order to manage turbidity during construction, various best management practices (BMPs) will be implemented to limit sediment resuspension. The water quality monitoring activities that will be implemented and the BMPs to manage the turbidity during the dredging operations are described in the *River Water Monitoring Plan* (CH2M HILL and Ecology and Environment [E&E] 2012).

Silt curtains will always be used at the TSCA area and will comply with the following:

- Silt curtains will be established around the dredging operations. The upstream and downstream sides must be installed within 80 meters of the dredge platform.
- Silt curtains must be long enough to cover at least half the depth of the water column.
- Silt curtains will be at least half the width of the river.

1.2 Preconstruction Staging Area Sampling

Preconstruction or background samples will be collected from the selected material processing/staging area property for analysis of the Buffalo River contaminants of concern (COCs), which include total PCB Aroclors, total polycyclic aromatic hydrocarbons (PAHs), lead, and mercury. Other chemical parameters might be added based on other known COCs at the site selected for processing/staging. The purpose for collecting these samples is to document preconstruction conditions for comparison to post-construction samples collected after remedial activities have been completed.

Discrete samples will be collected over the entire footprint of the staging area. Initial preconstruction sample locations will be randomly selected at a frequency of one sample per 1,500 square feet (ft^2) or where critical processing areas may be located based on the Contractor's operations plans. The preconstruction sampling locations will be marked and surveyed using Global Positioning System (GPS) units for location replication during post-construction sampling. Pre- and post-construction sampling and analysis will be performed by the Contractor and observed by the United States Environmental Protection Agency's (USEPA's) Great Lakes National Program Office (GLNPO) onsite representatives.

The Contractor will collect soil samples using a small shovel or other equipment that can be decontaminated between locations. Samples will be collected from the ground surface to a depth of 2 inches. The samples will be labeled and sent under chain of custody documentation to an accredited New York State approved Environmental Laboratory Accreditation Program (ELAP) laboratory for analysis.

The samples will be labeled and sent under chain of custody documentation to a New York State approved ELAP laboratory for analysis.

After demobilization, the pre- and post-sample results will be evaluated for additional site cleanup requirements.

1.3 DMU-8b TSCA Waste Characterization

Prior to the dredging contractor mobilizing to the site, an in situ waste characterization sampling plan and an analytical testing program will be prepared for characterization of the material for disposal purposes. The sampling plan will indicate the number and locations to be sampled to properly characterize the contaminants in DMU-08b for transport and disposal. At a minimum, a sample will be collected for every 500 cubic yards. The samples will be analyzed for total PCBs and the full toxicity characteristic leaching procedure (TCLP) parameter list. The specific test requirements will be confirmed based upon the requirements of the receiving disposal facility. The analytical results will be used to prepare waste profiles for the disposal firms. Samples will be collected with a vibracore and portioned to be representative of the expected thickness of the TSCA-level sediment. Samples will analyzed by a New York State approved ELAP laboratory.

1.4 Material Handling and Decontamination

TSCA requirements for treatment, storage, decontamination and disposal apply to this project, as well as RCRA requirements for management of hazardous waste. The watertight scow barges, barge mooring facility, offloading apparatus, sediment processing area, and operational procedures will be designed and operated to address the requirements in the regulations, or as approved by EPA..

Solidified sediment will be trucked to an off-site TSCA-permitted landfill. The exterior of the trucks will be decontaminated within the staging area with a pressure washer to remove visible sediment and soil. Upon completion, a visual inspection will be performed to verify that no residual sediments and soils are on the vehicle prior to transport over the public highway. After completion of the decontamination process, the truck will depart the site and transport the sediment to a TSCA-permitted off-site landfill.

Large debris present in the material dredged from DMU-8b will be removed from the sediment and decontaminated as described below. For hard impervious surfaces, such as steel, wipe testing methods will be used following the method specified in 40 Code of Federal Regulations (CFR) 761.123. A minimum of three surfaces will be wipe-tested and composited. The samples will be labeled and sent under chain of custody documentation to a New York State approved ELAP laboratory for analysis. All decontaminated debris will be disposed of at a non-hazardous off-site landfill under a Bill of Lading or Non-hazardous Waste Manifest. The unrestricted decontamination standard will be specified by EPA. Debris that cannot be decontaminated will be profiled as a separate waste stream for disposal at a TSCA-permitted landfill.

Equipment used to handle TSCA material will be decontaminated prior to handling non-TSCA and/or non-hazardous material. Decontamination of this equipment will follow the Alternate Decontamination and Sampling Procedure and EPA approval has been requested in accordance with 40 CFR 761.79(h). General equipment decontamination procedures shall:

1. Remove loose material by sweeping or washing;
2. Apply a solution of CAPSUR® and water mixed at manufacturer's recommendation ratio, with a dedicated high-pressure, low-volume pressure washer;
3. Rinse equipment using clean water from a high-pressure washer until the CAPSUR® solution had been removed, based on visual observation;
4. Collect wipe samples from a minimum of three surfaces on each piece of equipment that are combined for a single analysis;
5. Repeat procedure until equipment passes wipe tests in all locations; and
6. Coordinate decontamination schedule with the GLNPO's onsite representative to allow observation of procedures and sample collection.

The specific decontamination procedures for large dredging equipment will be included in the dredging contractor's operations plans based on exact equipment to be used for this area.

1.5 DMU-8b Post-Dredge Sampling

After dredging of DMU-8b down to the design cut lines, a post-dredging bathymetric survey will be performed to document the dredging cut lines have been achieved. After completion of the dredging has been verified by the bathymetric survey, confirmation sampling will be performed over the footprint of the TSCA-level sediment area to document the residual PCB contamination and sediment thickness remaining. Confirmation samples will be collected from seven locations as described below, which is approximately one location for every 2,500 ft^2 of surface area (the total area of DMU-8b is 17,600 ft^2) as shown on Drawing TS - 2.

In order to determine these seven confirmation sampling locations, sub-DMUs were established based upon of the level of contamination at previous sampling points and the average distance to the next clean sample. These sub-DMUs are shown on Drawing TS - 2.

- **Sub-DMU 8b-1 (navigation channel).** One confirmation sample core will be obtained using the previous sampling location (11-748+45C). The sample core will extend 2 feet beyond the final dredge limit and will be subdivided into 6-inch intervals. All intervals will be analyzed for total PCBs. If any interval exceeds 50 mg/kg, the results will be used to establish a new dredging depth for the sub-DMU area.
- **Sub-DMUs 8b-2 (navigation channel), 8b-3 (right descending bank), and 8b-6 (right descending bank)**. One confirmation sample core will be obtained in each of these sub-DMUs using the previous sampling locations. The sample cores will extend 2 feet beyond the final dredge limit and will be subdivided into 6-inch intervals. All intervals will be analyzed for total PCBs. If any interval exceeds 50 mg/kg, the results will be used to establish a new dredging depth for the sub-DMU area.
- **Sub-DMU 8b-4 (right descending bank).** Two confirmation sample cores will be obtained in this sub-DMU since it is the largest of the sub-DMUs. The sample cores will extend 2 feet beyond the final dredge limit and will be subdivided into 6-inch intervals. All intervals will be analyzed for total PCBs. If any interval exceeds 50 mg/kg, the results will be used to establish a new dredging depth for the sub-DMU area.
- **Sub-DMU 8b-5 (navigation channel).** One confirmation sample core will be obtained in this sub-DMU. The sample core will extend 2 feet beyond the final dredge limit and will be subdivided into 6-inch intervals. All intervals will be analyzed for total PCBs. If any interval exceeds 50 mg/kg, the results will be used to establish a new dredging depth for the sub-DMU area.

Sediment coring will use clear core liners to allow for visual observation and measurement of sediment thickness. The depth of soft sediment above the till will be measured and recorded at each core location to verify that most of the sediment has been removed. A geologist will identify the till layer and other layering features and will visually characterize the sediment deposits.

1.6 TSCA Post-Construction Staging Site Sampling

Sampling of the staging and processing site will be include soil, chip and wipe sampling and analysis by the Contractor based on the preconstruction sampling locations. The sampling locations, quantity, methodology, and analysis will be the same as for the preconstruction sampling. The Contractor shall be responsible for removing all materials and soil from these areas that contain contaminants in concentrations above the preconstruction sample results.

All equipment and support materials used for TSCA material processing and handling will require decontamination following completion of TSCA material removal as described above. Hopper barges will be cleaned after all DMU-8b work has been completed and TSCA materials have been off-loaded. Visual inspections will be performed after equipment is decontaminated to verify adhered sediment has been completely removed.

For hard impervious surfaces, such as steel or construction equipment, wipe testing methods will be used and will follow the standard method as specified in 40 CFR 761.123 including using a predetermined area template and a

gauze pad or glass wool that has been saturated with hexane to collect the sample. A minimum of three surfaces will be wipe tested and composited. The samples will be labeled and sent under chain of custody documentation to a New York State ELAP laboratory for analysis. Sample results will be compared to pre-dredging results to verify the equipment has been cleaned.

An estimated 100 samples will be collected and analyzed.

SECTION 2

Air Monitoring

2.1 Community Air Monitoring

Community air monitoring shall be performed in accordance with this Community Air Monitoring Plan (CAMP) and the New York State Department of Health's (NYSDOH) guidance document titled 'New York State Department of Health Generic Community Air Monitoring Plan' dated May 2010. Real-time monitors that measure particulate matter finer than 10 micrometers in diameter (PM_{10}) and integrating over a 15 minute interval will be used (e.g., TSI DustTRAK™). Three to four locations will be used, depending upon the configuration of the staging area property. Locations must include at least one upwind and two down-wind locations during active material staging and processing operations until all wastes are removed from the site.

Real-time monitoring will be performed for volatile organic compounds (VOCs) for personnel health and safety using a Multirae Photoionization Detector or equivalent. The equipment must be capable of calculating a 15 minute running average. VOCs will be monitored downwind of the perimeter of operations continuously during work activity. Upwind background concentrations shall be established daily.

In addition, air monitoring samples for total PCBs and lead will be collected. PCBs will be sampled using a BIOS Defender 510M, 50-5000 cc or equivalent and samples will be analyzed according to modified NIOSH 5503. PCBs may be sampled at 1 liter per minute for a 24-hour period. Samples will be submitted for analysis at a certified local laboratory with a 24-hour turnaround. Sampling will be conducted daily during operations. If results consistently show readings at background then frequency may be reduced based on coordination with NYSDEC. Lead will be sampled with an Allegro Sampling Pump or equivalent and the samples analyzed according to NIOSH 7300. Sampling and analysis will be performed for five continuous days from startup, then weekly until all materials and processes have been removed from the site. Samples to be collected are summarized in Table 1 and analytical methods are summarized in Table 2.

2.2 Fugitive Dust and Odor Monitoring

Fugitive dust and odor monitoring will be performed in accordance with this Fugitive Emission and Odor Suppression Plan. Staff will check for project-related odors at various locations around the perimeter of the site adjacent to the community at various times throughout the day (for example, morning, noon, and late afternoon). Real-time monitoring will be performed upwind and downwind of the site for dust and VOCs using the same equipment used in the CAMP.

GLNPO's onsite representative will note the prevailing wind direction daily during site activities. In addition, a Web site that records daily wind direction for the Buffalo, New York area, such as http://www.wunderground.com/history/, will be consulted. The information will be used to determine the upwind and downwind monitoring points. Every morning, the data from the previous day will be used to determine if the PM_{10} primary National Ambient Air Quality Standard of 150 micrograms per cubic meter over a 24-hour period is being exceeded. If the PM_{10} standard is exceeded, and the sediment stabilization operations are suspected as the source of the PM_{10} emissions, operations will be evaluated and modified to reduce fugitive dust emissions. Methods to reduce emissions may include covers, water sprays or suppressive foams.

SECTION 3

Temporary Water Treatment System Monitoring

The potential sources of wastewater generated during processing of TSCA-level sediment include:

1. Free water from sediments transported in the hopper barges;
2. Free water draining from stockpiled TSCA-level sediments;
3. Precipitation falling on the processing pad and contacting stockpiled TSCA-level sediments
4. Backwash wastewater from the temporary water treatment system; and
5. Water used for decontamination activities (debris and personnel).

A temporary water treatment system (TWTS) designed to treat the wastewater will be mobilized to the site by the Contractor and operated during the TSCA-level sediment dredging activities. Wastewater will be collected, treated, and discharged to either the sanitary sewer of the Buffalo Sewer Authority under a temporary discharge permit or discharged to the Buffalo River after treatment under a New York State Pollution Discharge Elimination System (SPDES) permit.

If required by the permit, effluent water from the TWTS will be held in batches during the mechanical dredging activities, and each batch will be sampled and tested for PCBs and any other parameters identified in the Buffalo Sewer Authority temporary discharge permit or the SPDES permit prior to discharge.

Samples of effluent collected from full holding tanks will be submitted to an off-site laboratory for analysis. Once the post-treatment samples indicate no exceedance of discharge criteria, treated water will be discharged. Analytical requirements will be determined based on the permit requirements, which would likely include total PCBs (low detection levels – 0.065 µg/L) and total suspended solids (TSS).

Tables

TABLE 1
Estimated Number of Samples for TSCA Monitoring
Buffalo River AOC Final Design

Source	Matrix	Contaminants of Concern	Estimated No. of Cores or Locations	Estimated No. of Samples	Estimated No. of QC Samples[a,b]	Total Number of Samples for Analysis
Dredging Operations—Preconstruction Sampling						
TSCA Staging / Processing Area	Soils	PCBs, PAHs, lead, and mercury	35	35	4	39
TSCA Staging / Processing Area and Equipment	Wipes or Chips	PCBs	40	40	5	45
TSCA In-situ Waste Characterization	Sediment	PCBs and full TCLP	6	11	2	13
Dredging Operations—Post-construction Sampling						
TSCA Post Confirmation Sampling	Sediment	PCBs[c]	7	28	3	31
Staging and Materials Processing Area—Post-construction Sampling						
TSCA Staging Area	Soils	PCBs, PAHs, lead, and mercury	35	35	4	39
TSCA Equipment	Wipes	PCBs	90	90	10	100
TSCA Area Debris	Wipes	PCBs	15	15	2	17
Dredging Operations—Air Monitoring						
Dust monitoring - 1 upwind and 3 downwind	Monitor	Total Particulates	4	Continuous with 15-minute interval readings recorded		
Air Sampler - 1 upwind and 3 downwind	Filter and Sorbant	PCBs	4	40	5	45
Air Sampler - 1 upwind and 3 downwind	Filter	Lead	4	40	5	45
VOC Sampler	Monitor	VOCs	2	Continuous with 15 minute running average		
Dredging Operations—Water Monitoring						
TSCA Dewatering	Water	PCBs and others to be determined	1	10	2	12

[a] 10 percent QC Samples (5% for field blanks and 5% field duplicates.

[b] Assume daily field blank for air samples for 15 days.

[c] All samples will be analyzed for PCB by a screening-level analysis on a 24-hour turnaround time basis.

TABLE 2
Analysis Requirements for TSCA Monitoring
Buffalo River AOC Final Design

Analysis	Matrix	Method	Laboratory [a]	Notes
TCL PCBs	Soils	SW 8082	TBD	
TCL PAH Only	Soils	SW 8270 SIM	TBD	
TAL Metals lead and mercury only	Soils	SW 6010 and 7471	TBD	
TCL PCBs	Wipes and Chips	Method 8082, and 40 CFR 761.3, 761.123 and 761.30	TBD	
TCL PCBs	Sediment/ Waste	SW 8082	TBD	For Waste Disposal Purposes only
Full TCLP	Sediment/ Waste	SW 1311, 8260, 8270, 8081, 6010, and 7470	TBD	
TCL PCBs	Sediment/ Confirmation	Method 8082	TBD/Local	24-hour TAT
TCL PCBs	Air	Modified NIOSH 5503	TBD/Local	24-hour TAT
Lead	Air	NIOSH 7300	TBD/Local	24-hour TAT
TSS	Water	EPA 160.1	TBD	
PCBs	Water	EPA 608	TBD	
PAHs	Water	EPA 8270	TBD	72-hour TAT
Lead and Copper	Water	EPA 200.7	TBD	
Mercury	Water	EPA 245.1	TBD	
Oil and Grease	Water	EPA 413.1	TBD	TSCA Dewatering only

[a] Laboratories must be accredited for the method and matrix under the New York State Environmental Laboratory Accreditation Program.
[b] Limits for Benzo(a)anthracene (D) will not be met.
TAT – Turnaround Time
TBD – To be determined
EPA – 40 CFR 136 Clean Water Methods
NIOSH – National Institute of Occupational Safety and Health
SW – SW 846 Methods most recent version

Drawing

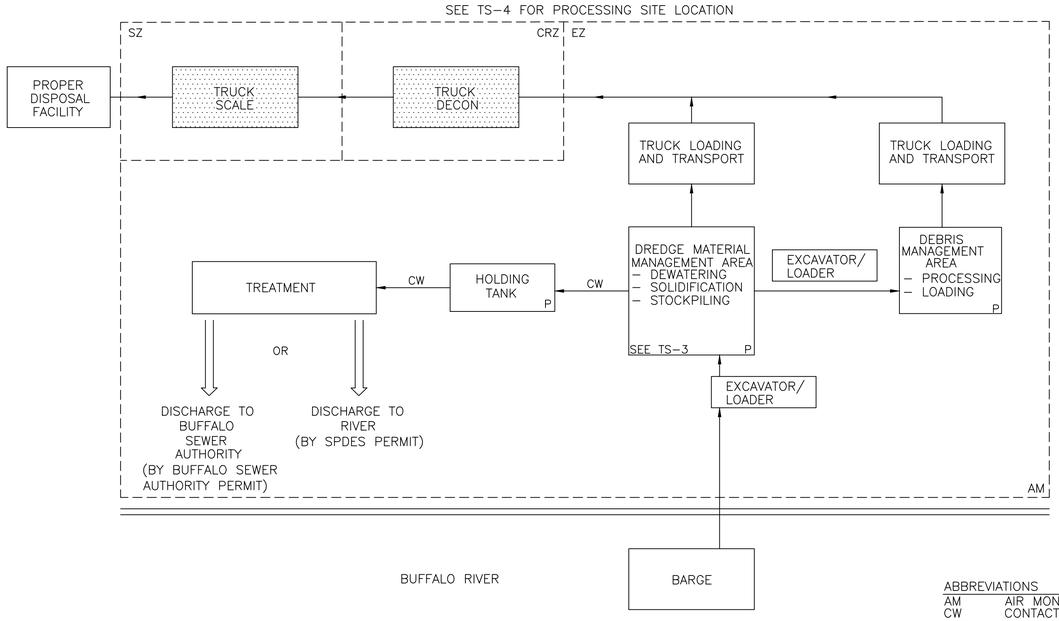

DREDGED TSCA SEDIMENT AND CONTACT WATER PROCESSING

ABBREVIATIONS

AM	AIR MONITORING
CW	CONTACT WATER
CRZ	CONTAMINATION REDUCTION ZONE
EZ	EXCLUSION ZONE
P	PUMP
SW	STORMWATER
SZ	SUPPORT ZONE

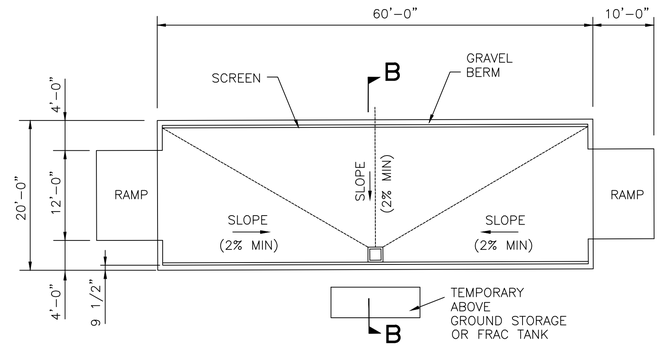

PLAN VIEW

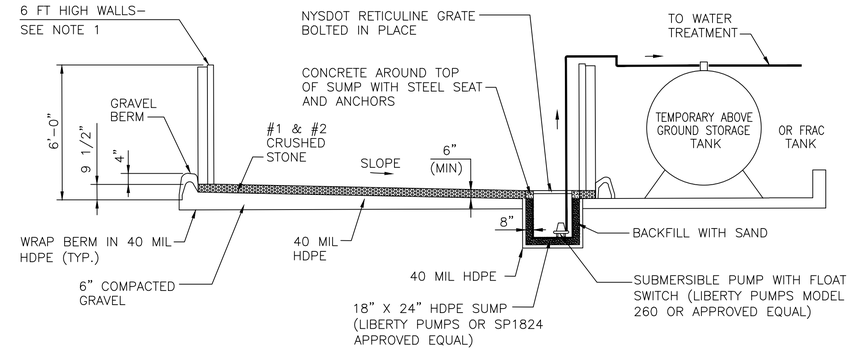

SECTION B – B

DECONTAMINATION PAD DETAILS

NOT TO SCALE

NOTES:

1. 6 FT. HIGH SCREEN WALLS TO BE SECURELY ANCHORED AND CONSTRUCTED OF STEEL OR WOOD FRAMING WITH CORRUGATED FIBERGLASS SIDING OR SHEET PLASTIC CAPABLE OF WITHSTANDING WIND PRESSURE, ABUSE AND SHIELD THE SURROUNDING AREA FROM DECON DEBRIS.
2. DIMENSIONS SHOWN ARE TYPICAL VALUES FOR THE DECONTAMINATION PAD COMPONENTS. THE CONTRACTOR SHALL SUBMIT FULLY DIMENSIONED DECONTAMINATION PAD PLANS AND DETAILS FOR APPROVAL.

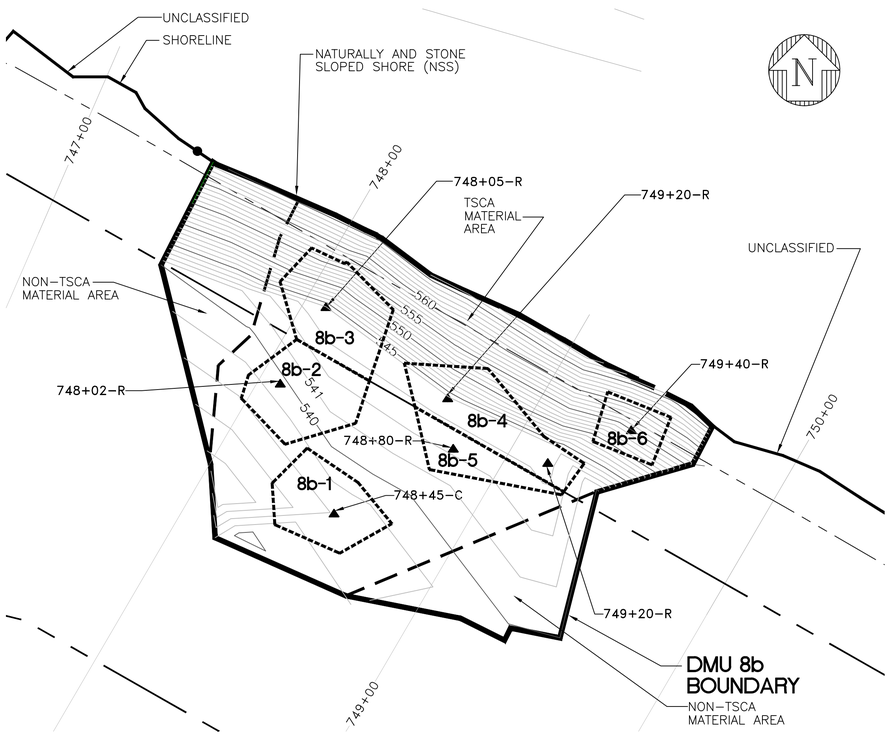

TSCA AREA CONFIRMATION SAMPLE LOCATION PLAN

SCALE: 1" = 30'–0"

LEGEND

748+97–C ▲ — PROPOSED CONFIRMATION SAMPLE LOCATION
CHANNEL
STATION

8b–6 — SUB–DMU AREAS (PCB >50 PPM)

IT IS A VIOLATION OF NEW YORK STATE EDUCATION LAW TO ALTER THIS DOCUMENT BY MEANS INCONSISTENT WITH SECTION 7209 OF SAID LAW.

NO	DATE	DESCRIPTION	APVR	N
NO	DATE	DESCRIPTION	APRV	N
D	12-17-12	REVISED FOR PRE-FINAL DESIGN (NOT FOR CONSTRUCTION)	KMK	TRH
C	3-19-12	ISSUED FOR TSCA APPLICATION	KMK	TRH
B	12-12-11	REVISED FOR 60% DRAFT (NOT FOR CONSTRUCTION)	KMK	TRH
A	12-5-11	ISSUED FOR 60% DRAFT REVIEW (NOT FOR CONSTRUCTION)	JJK	TRH
NO.	DATE	REVISION	BY	APVD
DSGN	MG STEFFAN	DR JJ KOHLER	CHK M ALOI P.E.	APVD T HEINS P.E.

CH2MHILL.
ecology and environment engineering p.c.

SEDIMENT REMEDIATION DESIGN
BUFFALO RIVER AREA OF CONCERN
US ENVIRONMENTAL PROTECTION AGENCY
BUFFALO, NEW YORK

TSCA AREA PROCESS FLOW DIAGRAM / FLOW CHART

AS NOTED
VERIFY SCALE
BAR IS ONE INCH ON ORIGINAL DRAWING.
0 1"

DATE	12-17-12
PROJ	EE-002304-0023-08-01
DWG	TS-2
SHEET	32 OF 51

PRELIMINARY - NOT FOR CONSTRUCTION

F:\Buffalo River Design 2010\ENE design 2010\90% ENE DESIGN\REVISED 12-12-11\TS-2.dwg
BUFFplot: 10/29/12 KMK

FILENAME: TS-2.DWG PLOT DATE: 12-17-12 PLOT TIME: 4:30 PM

River Water Monitoring Plan

Sediment Remediation
Buffalo River Area of Concern

Buffalo, New York

WA No. 146-RDRD-1524/Contract No. EP-S5-06-01

Prepared for

December 2012

CH2MHILL®

Contents

Tables

Acronyms and Abbreviations

AOC	Area of Concern
BMP	best management practice
CDF	Confined disposal facility
CFR	Code of Federal Regulations
COC	contaminant of concern
DMU	dredge management unit
ELAP	Environmental Laboratory Accreditation Program
ERDC	Engineer Research and Development Center
GLNPO	Great Lakes National Program Office
GPS	Global Positioning System
LWD	low water datum
µg/L	micrograms per liter
m/sec	meters per second
mg/kg	milligrams per kilogram
mg/L	milligram per liter
NTU	nephelometric turbidity unit
NYSDEC	New York State Department of Environmental Conservation
PAH	polycyclic aromatic hydrocarbon
PCB	polychlorinated biphenyl
ppm	parts per million
Ship Canal	City Ship Canal
TOGS	Technical and Operational Guidance Series
TSS	total suspended solids
USACE	United States Army Corps of Engineers
USEPA	United States Environmental Protection Agency

SECTION 1

Monitoring Approach

In order to assess potential water quality impacts related to the remedial action, the following River Water Monitoring Plan was developed, which will be implemented by the contractor. The monitoring approach and sampling scheme have been developed based upon the New York State Department of Environmental Conservation's (NYSDEC's) *Technical and Operational Guidance Series (TOGS) 5.1.9 "In-Water and Riparian Management of Sediment and Dredge Material"* (November, 2004). The monitoring approach is described below and the sampling scheme is presented in Section 2. Mitigation and response actions are presented in Section 3.

1.1 Dredging Approach

The potential to create turbidity and impact river water quality will be minimized by the contractor's adherence to the following mechanical dredging BMPs

- Barges will be watertight and inspected to confirm water-tightness prior to dredging operations and dredged material transport.
- Turbidity curtains will be deployed during dredging operations in select DMUs.
- An environmental clamshell bucket will be used for mechanical dredging of sediment.
- Smoothing with the dredging bucket to contour the dredge cut will not be permitted.
- Work on slopes will proceed from top of slope to toe of slope as practicable.
- Utilization of positioning devices (such as global positioning system [GPS]) to allow the operator to be aware of the location of the dredge bucket in relation to the top of the sediment.
- Use of an experienced environmental dredging operator capable of implementing appropriate BMPs to limit resuspension.
- The operator will minimize overfilling of the dredge bucket.
- The operator will adjust the rate of bucket descent and retrieval as necessary to reduce sediment re-suspension.
- The operator will perform single bites with the bucket, and each bucket will be brought to the surface and emptied between bites.
- The operator will only decant the environmental bucket by slowly releasing water that drains from the valves in the bucket at the surface.
- The operator will not overfill barges with dredged material and oil booms will be available for emergency use.

Based on these BMPs, the USACE Engineer Research and Development Center (ERDC) performed modeling to predict the maximum allowable sediment loss rates from dredging and maximum allowable production rate with and without resuspension controls (USACE, 2012). Dredging activities were assumed to be completed within two dredge seasons and performed using mechanical dredges equipped with environmental buckets. The model assumed the use of two dredge platforms achieve an estimated average production rate of 3,200 cubic yards per day. Dredges were assumed to operate 24 hours per day and 6 days per week with the seventh day of each week set aside for scheduled maintenance or to compensate for unanticipated downtime during the week's activities.

The USACE evaluation concluded a few DMUs will need to be dredged using silt curtains or at lowered production rates to address potential sediment resuspension issues. Production rates will be reduced when dredging DMU 6 (maximum of 164 cubic yards per day), DMU 16 (595 cubic yards per day), and DMU 17 (5,038 cubic yards per day), and silt curtains will be required when dredging DMUs 6, 8, 9, 10, 16, 17, 37, 41, and 44.

Silt curtain usage will comply with the following:

- Silt curtains will be established around the dredging operations. The upstream and downstream sides must be installed within 80 meters of the dredge platform on the upstream and downstream side.
- Silt curtains must be long enough to cover at least half the depth of the water column.
- Silt curtains will encompass at least half the width of the river.

Upon the completion of dredging, a bathymetric survey will be conducted by the contractor to verify the final cut surface has reached target elevations within the allowable tolerances. If the post-dredge survey indicates dredging has not been completed to within these tolerances, additional dredging will be conducted until the target elevations have been achieved.

1.2 Monitoring Approach

The USACE ERDC modeling was performed using the modified elutriate and toxicity test results of bulk sediment samples collected as a single representative composite sample for each DMU. Chemical parameters include polychlorinated biphenyls (PCBs), polycyclic aromatic hydrocarbons (PAHs), ammonia, and Target Analyte List (TAL) metals. Physical parameters include total organic carbon and particle size distribution. Composited sediments were subject to modified elutriate testing in accordance with USACE procedures (see BODR Appendix A.1).

The modeling used a mixing zone based on a downstream distance of 150 meters (approximately 500 feet) from the dredge operations with average flow conditions (0.1 meters per second [m/sec] in the Buffalo River and 0.002 m/sec in the City Ship Canal) and mean water depth within the DMUs (5.5 meters in Buffalo River and 6.4 meters in City Ship Canal) (USACE 2012). The evaluation predicted whether the acute NYSDEC surface water criteria for dissolved PCBs, select PAHs, lead and mercury would be exceeded with and without controls assuming a maximum dredge production rate of 7,500 cubic yards per day. The controls that were evaluated include reduced production rates, operation controls expressed as potentially different percent losses, and silt curtains. This evaluation supplemented an earlier analysis of dissolved contaminant releases for select COCs prepared by the USACE (USACE 2011a and b).

A sampling approach to assess compliance with modeling was developed (see Section 2). As per NYSDEC TOGS 5.1.9, the level of acute toxicity is considered to be any total suspended solids (TSS) levels 100 parts per million (ppm) above ambient background conditions. Because TSS requires off-site analysis, real-time turbidity readings will be used as a surrogate for TSS. Based on experience at other dredging projects, it is anticipated that the correlation between TSS and turbidity is nearly 1 milligram per liter (mg/L) to 1 nephelometric turbidity unit (NTU). This typical correlation will be used initially until a site-specific correlation can be determined (see Section 2). Based on the 1 mg/L to 1 NTU correlation, a turbidity control limit during dredging of 100 NTUs above ambient background will be used to determine the need for mitigation and response actions as described in Section 3.

SECTION 2

Sampling Scheme

2.1 Sampling Layout and Implementation

When the dredge platforms are sufficiently close to one another such that the individual dredging operations can be evaluated as a group, a single upstream and downstream sampling location will be used to assess potential water quality impacts attributable to the dredging operations. However, in cases when assessment of individual dredge operation is necessary, the sampling scheme will be adjusted accordingly.

In order to simplify implementation of the monitoring program and due to fluctuation in the flow regime within the Buffalo River, the upcurrent background and downcurrent sampling buoys will each be located within 800 feet and no closer than 300 feet from the dredge operation(s) with an average distance of 500 feet. This distance range will provide sufficient distance such that adequate mixing of the sediment plume within the water column occurs.

Turbidity sensors will be deployed at each location at mid-depth of the river. The sensors will be installed on small floating platforms to simplify relocation when necessary. Turbidity readings will be transferred by cellular modem telemetry, compiled, and made available within 5 minutes of each reading to the Dredging Contractor's field personnel. Data from the turbidity sensors also will be stored in an integrated data logger that can be accessed in the event the telemetry system is inoperable. Readings will be recorded once every 15 minutes at the each turbidity monitoring stations.

The turbidity monitoring setup will be equipped with the means of sending out an automated email notification to the Dredging Contractor's field personnel based on readings. The turbidity control limits will be set using a rolling average and a trigger value based initially on 100 NTUs above background. The value was determined based on an anticipated correlation between the TSS and turbidity of 1 mg/L to 1 NTU. As per NYSDEC TOGS 5.1.9, the level of acute toxicity is considered to be a TSS level 100 ppm above ambient background conditions based on the 4 hour rolling average. TSS samples will be collected shortly after the commencement of dredging by the oversight contractor in accordance with NYSDEC TOGS 5.1.9 to establish the project-specific correlation between turbidity and TSS. Implementation of revised values will be coordinated with EPA and NYSDEC.

The dredging contractor will monitor flow conditions once every six hours while dredging activities are being performed. The dredging contractor will select one location in the City Ship Canal and one location in the Buffalo River where these flow readings will be obtained. A submersible flowmeter will be lowered approximately mid-depth in the center of the channel and the flow velocity and direction will be recorded. The dredging contractor will provide this information as soon as it is obtained to the oversight contractor, preferably by two-way radio or cell phone. Upcurrent and downcurrent directions from the dredging operations will be based upon the flow direction determined during these monitoring events. The monitoring buoy located in the upcurrent direction from dredging operations will be considered the background ambient buoy for the turbidity monitoring.

More details regarding the turbidity monitoring and comparison to criteria are included in Section 3.

2.2 Sampling Method

An automated sampling buoy will incorporate the use of a programmable sampling device, such as an ISCO automated sampler, that obtains an aliquot sub-sample obtained once an hour over a 24-hour period in order to provide a 24-hour composite sample. The sampling tube attached to the sampling buoy will be placed at the approximate mid-depth of the water column. As part of the automated sampling buoy, a water monitoring device will be mounted to the buoy to measure turbidity at 15 minute intervals as described in Section 2.1.

During the initial two weeks of dredging operations, water samples will be collected daily (i.e., a 24-hour composite sample will be generated each day from each sampling buoy for chemical analysis). Samplers will be deployed

upcurrent and downcurrent of dredging operations and sampling buoys will both be located no further than 800 feet and no closer than 300 feet from the dredge operation(s). Depending on the location of the dredging operations, up to four buoys may be deployed, two for each operation. After the initial two-week sampling period, if it is demonstrated the dredging operations do not result in TSS levels greater than 100 mg/L above ambient background conditions (or turbidity levels 100 NTUs above ambient background, assuming a 1 mg/L to 1 NTU correlation between TSS and turbidity), the sampling frequency will be reduced to a single 24-hour composite sample from each sampling buoy per week. If sampling continues to demonstrate that dredging operations do not result in increases of over 100 mg/L in TSS concentrations above ambient conditions, then sampling frequency may be further reduced to after coordination by NYSDEC. Guidance values to evaluate surface water criteria are provided in Table 1.

For dredging operations in the TSCA area, sampling will be conducted daily for PCBs regardless of whether the overall sampling frequency has been reduced.

The oversight contractor will have a sampling crew whose primary responsibility will be to collect the sample containers that are filled by the automated sampling buoys and relocate the automated sampling buoys, when necessary. As stated previously, depending upon the proximity of the dredge operations to one another, separate sampling areas may be appropriate. Since samples are being evaluated for dissolved guidance values (see Table 1), samples will be filtered using a 0.45 micron filter prior to sample preservation (with the exception of samples for TSS analysis). Samples will be analyzed as described in Section 2.3. Samples to be collected are summarized in Table 2.

2.3 Sample Analysis

Water samples will be analyzed for TSS, PCBs, select PAH and metals (lead, copper, and mercury) using standard water methods that have detection limits below acute surface water criteria (see Table 1). The standards are based on dissolved concentrations and a value for PCBs of 0.2 micrograms per liter (µg/L) per Aroclor, as per the method detection limit developed for EPA Method 608. Proposed analytical methods are summarized on Table 3. Sample analysis will be undertaken at an environmental laboratory approved by the New York State Department of Health (ELAP).

SECTION 3

Mitigation and Response Actions

Monitoring will be performed by the dredging contractor to verify that BMPs (see Section 1.1) are in use at all times and no visual deficiencies are observed during the dredging operations. The areas near the barges will be monitored for oil sheens and other visual plumes. In the event that oil sheens are observed, the contractor will install oil booms to control the spread of such sheens.

Turbidity monitoring will be performed at the automated sampling buoy. The average turbidity reading over a 4-hour period based on sixteen consecutive readings will be used as the basis of comparison. The average value of the upcurrent (background) location will be compared to the rolling average value of the downcurrent location for the same period. The monitoring limit will be based on 100 NTUs above the upstream (background) level, assuming a 1 mg/L to 1 NTU correlation between TSS and turbidity.

If an obvious outlier appears, it shall be eliminated from the rolling average calculation. An outlier will be defined as a reading that is outside the range of 50 to 200 percent of the average of the three previous readings. In addition, to be considered an outlier, the following reading must return to a range of 75 to 133 percent of the average of the three readings preceding the outlier. In practice, it is common to get occasional one-time spikes that cannot be tied to activities in the water. If this happens regularly (that is, more frequently than twice per day), the sensor will be inspected and cleaned, repaired, or replaced.

Turbidity readings will be reported in the daily reports by the dredging contractor. If there is an exceedance as described above, EPA's oversight contractor will get notified immediately. After review and verification, NYSDEC and EPA will be notified within 4 normal business hours with additional documentation of corrective action (e.g., "fouling of the sensor", "checked with handheld", etc.) or employment of BMPs listed in Section 1.1.

If, after employing the BMPs listed in Section 1.1, an exceedance of the turbidity criteria of 100 NTUs above ambient conditions (assuming a 1 mg/L to 1 NTU correlation between TSS and turbidity) is reported and if it is determined that the cause for the exceedance is related to the remedial action, additional response actions may be employed. Actions will be coordinated with EPA and NYSDEC. Possible mitigation measures are outlined below:

- Reducing the dredging operations removal rate or temporarily suspending dredging operations.
- Implement the use of silt curtains to limit the dispersion of resuspended sediments.
- If silt curtains have already been established around the dredging operation(s) where the confirmed exceedance was obtained, an additional silt curtain layer could be established around the dredging operation in question.

Depending upon the situation in which the exceedance is identified and investigated by the oversight contractor, a single mitigation measure may be used to correct the issue or a combination of measures may be implemented. Mitigation measures will be coordinated with the oversight contractor. As more data are obtained as part of the real-time turbidity monitoring, additional mitigation measures may be developed and implemented, or the additional measures suspended if values are significantly lower.

3.1 Chemical Sampling

If the initial two-week monitoring data indicate the USACE model does not accurately represent potential for surface water impacts associated with dredging, the model may be revised and monitoring parameters may be adjusted accordingly. The upcurrent monitoring data will be used to evaluate whether an exceedance of the surface water criteria at the downcurrent monitoring location is related to dredging operations. Turnaround of chemical analyses for surface water monitoring will be 72 hours. Therefore, mitigation measures cannot be deployed in real time.

Results will be reported in the daily reports by the dredging contractor. If there is an exceedance as described above, EPA's oversight contractor will get notified immediately by the laboratory. After review and verification, NYSDEC and

EPA will be notified within 24 normal business hours with additional documentation of corrective action or re-analysis.

If sampling continues to demonstrate dredging operations do not result in significant increases in surface water concentrations above ambient conditions, then sampling frequency may be reduced as described in Section 2.2. If results indicate significant increases in surface water concentrations above ambient conditions, then sampling frequency may be increased.

If after a single mitigation measure or combination of measures has been implemented and monitoring data indicate the surface water criteria are no longer being exceeded, the necessity of continuing the implementation of the mitigation measure(s) will be evaluated with EPA and NYSDEC. Following this evaluation, some or all of the measures implemented may be used at reduced levels or eliminated entirely.

SECTION 4

References

U.S. Army Corps of Engineers (USACE). 2011a. Letter from Paul Schroeder, PhD, P.E., Research Civil Engineer, Environmental Engineering Branch to Mr. David Schulenberg, Evaluation of Accelerated GLLA Dredged Material Placement in Buffalo Harbor Confined Disposal Facility, September 30.

U.S. Army Corps of Engineers (USACE). 2011b. Letter from Paul Schroeder, PhD, P.E., Research Civil Engineer, Environmental Engineering Branch to Mr. David Schulenberg, Evaluation of Dissolved Contaminant Releases Resulting from GLLA Dredging in the Buffalo River and Buffalo Ship Canal, October 4.

U.S. Army Corps of Engineers (USACE). 2012. Letter from Paul Schroeder, PhD, P.E., Research Civil Engineer, Environmental Engineering Branch to Mr. David Schulenberg, Supplemental Evaluation of Contaminant Releases Resulting from GLLA Dredging in the Buffalo River and Buffalo Ship Canal Using Water Quality Criteria for Acute Toxicity Provided by the NY State Department of Environmental Conservation, April 26.

Tables

TABLE 1
Guidance Values for Evaluating Surface Water Monitoring

Contaminant	NYSDEC Guidance Values for Acute Aquatic Toxicity and Protection, µg/L
Acenaphthene (D)	48
Anthracene (D)	35
Benzo(a)anthracene (D)	0.23
Benzo(a)pyrene (D)	
Fluorene (D)	4.8
Napthalene (D)	110
Phenanthrene (D)	45
Pyrene (D)	42
Total PCBs (D)	1.4
Sum of Aroclors	0.2/Aroclor
Lead (D)	155.97
Mercury (D)	1.4
Mercury (T)	
Copper (D)	20.31

(T) = Total

(D) = Dissolved

TABLE 2
Estimated Number of Samples for River Water Monitoring
Buffalo River AOC Final Design

Source	Matrix	Contaminants of Concern	Estimated No. of Locations	Estimated No. of Samples	Estimated No. of QC Samples[a]	Total Number of Samples for Analysis
Initial Dredging Operations – two weeks	Water – 24 hour composite field filtered (except TSS)	TSS, PCBs, PAH[b], lead, copper, and mercury	4	56	6	62
Initial Dredging Operations – TSS/Turbidity Correlation Sampling	Water – grab sample	TSS	N/A	20	2	22
Dredging Operations – weekly for 16 weeks Year 1[C]	Water – 24 hour composite field filtered (except TSS)	TSS, PCBs, PAH[b], lead, copper, and mercury	4	64	7	71
Dredging Operations – weekly for 30 weeks Year 2 [C]	Water – 24 hour composite field filtered (except TSS)	TSS, PCBs, PAH[b], lead, copper, and mercury	4	120	12	132
All Dredging Operations	Water – In-situ	Turbidity	4	Continuous		

[a] 10 percent QC Samples (5% for field blanks and 5% field duplicates).
[b] PAH include Acenaphthene (D), Anthracene (D), Benzo(a)anthracene (D), Benzo(a)pyrene (D), Fluorene (D);Napthalene (D), Phenanthrene (D), and Pyrene (D) where (D) is dissolved phase.
[c] Frequency of sampling may be reduced in consultation with NYSDEC if results show limited impacts from dredging.

TABLE 3

Analysis Requirements for River Water Monitoring

Buffalo River AOC Final Design

Analysis	Matrix	Method	Lab [a]	Notes
TSS	Water	EPA 160.1	TBD	72-hour TAT
PCBs	Water[b]	EPA 608	TBD	Report to MDLs to meet acute guidance values for aquatic toxicity and protection[d]
PAHs[c]	Water[b]	EPA 8270	TBD	
Lead and Copper	Water[b]	EPA 200.7	TBD	
Mercury	Water[b]	EPA 245.1	TBD	

[a] Laboratories must be accredited for the method and matrix under the New York State Environmental Laboratory Accreditation Program.

[b] Water samples will be filtered to measure dissolved parameters.

[c] PAH include Acenaphthene (D), Anthracene (D), Benzo(a)anthracene (D), Benzo(a)pyrene (D), Fluorene (D); Napthalene (D), Phenanthrene (D), and Pyrene (D) where (D) is dissolved phase.

[d] Limits for Benzo(a)anthracene (D) will not be met.

TAT – Turnaround Time

TBD – To be determined

EPA – 40 CFR 136 Clean Water Methods